WML/WML-F

WM SERIES

Caratteristiche - Specifications - Caractéristiques - Características

		WML	WML-F
IN	Ø	1/2 BSP	1/2 BSP
	Press. Min.	-0,1 bar (-1.5 PSI)	1 bar (15 PSI)
	Press. Max.	6 bar (87 PSI)	6 bar (87 PSI)
	Temp. Max.	60°C (140°F)	60°C (140°F)
OUT	Ø	3/8 BSP	3/8 BSP
SHAFT	Ø	24 mm	24 mm
OIL	SAE 75W 90	0,6l (0.16 U.S.gal.)	0,6l (0.16 U.S.gal.)
WEIGHT	kg (lbs)	7 kg (14.4 lbs)	7 kg (14.4 lbs)

WML: DX T B SX BZ M G

WML-F: DX BZ B SX M G

Guarnizioni - Seals Joints - Juntas	
Anteriori - Front	"V"
Posteriori - Rear	"U"

WML - 1450 RPM									
Codice Code	Modello Model	Press. Max Max Pres.		Portata Flow		Potenza Power		Pistone Plunger	Corsa Stroke
		bar	PSI	l/min	GPM	kW	hp	Ø mm	mm
04.8000.97.3	**WML 1117**	170	2500	11	2,9	3,3	4,5	18	9,8
04.8001.97.3	**WML 1214**	140	2000	12	3,2	2,9	4	18	10,8
04.8002.97.3	**WML 1217**	170	2500	12	3,2	3,6	5	18	10,8
04.8003.97.3	**WML 1317**	170	2500	13	3,4	4	5,5	18	12,4
04.8004.97.3	**WML 1515**	150	2200	15	4	4	5,5	18	13,6
04.8009.97.3	**WML 1520-B**	200	2900	15	4	5,5	7,4	18	13,6

WML-F - 2800 RPM									
Codice Code	Modello Model	Press. Max Max Pres.		Portata Flow		Potenza Power		Pistone Plunger	Corsa Stroke
		bar	PSI	l/min	GPM	kW	hp	Ø mm	mm
04.8100.97.3	**WML 1114-F**	140	2000	11	2,9	2,9	4	15	8
04.8101.97.3	**WML 1117-F**	170	2500	11	2,9	3,6	5	15	8
04.8102.97.3	**WML 1120-F**	200	2900	11	2,9	4	5,5	15	8
04.8103.97.3	**WML 1316-F**	160	2350	13	3,4	4	5,5	15	9,8
04.8104.97.3	**WML 1320-F**	200	2900	13	3,4	5,1	7	15	9,8
04.8105.97.3	**WML 1515-F**	150	2200	15	4	4	5,5	15	10,8
04.8106.97.3	**WML 1520-F**	200	2900	15	4	5,5	7,5	15	10,8

WML / WML-F

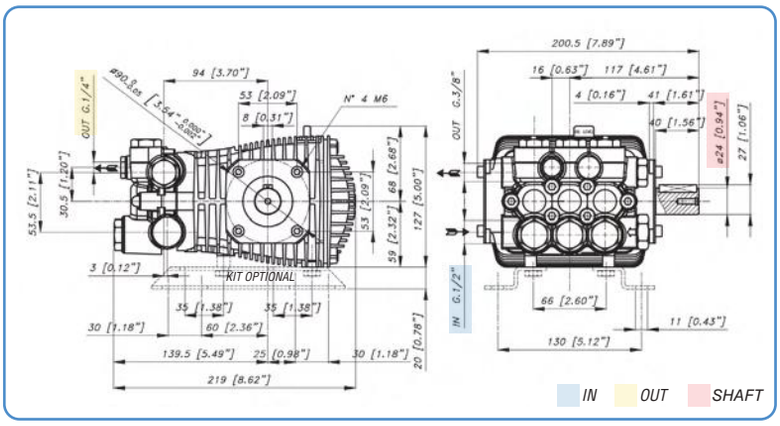

Accessori di completamento - Complementary accessories
Accessoires complémentaires - Accesorios complementarios

pag.115

pag.124

pag.126

BERTOLINI pumps