GRINDER 1000-1200-1600

SUBMERSIBLE PUMPS

TECHNICAL DATA

Operating range:
from 3 to 18 m^3/h with head up to 23 metres.
Pumped liquid:
water loaded with filamentous matter, paper or textile material, generally for use in domestic or civil sewage waste systems without grids, compatibly with the construction materials.
Liquid temperature range: from 0 °C to 35 °C.
Maximum immersion depth:
20 metres (with cable of appropriate length).
Motor protection class: IP 68.
Insulation class: F.
Standard voltage: 220-240 V - 50Hz single-phase.
380-415 V - 50Hz three-phase.
Power cable: H07RN-F, standard length 10 metres.
Supplied with: UNI 1092 PN 6 flange
Installation: fixed using a coupling device, or free in the vertical position.
Continuous duty with completely submerged pump.

APPLICATIONS

Submersible cast iron pump with grinder for lifting water loaded with filamentous matter, paper or textile material, generally for use in domestic or civil sewage waste systems without grids.

CONSTRUCTION FEATURES OF THE PUMP

ENGJL 200 cast-iron cover, motor body, hydraulic body and impeller; AISI 440C grinder.
Double carbon/alumina mechanical seal in oil chamber.

CONSTRUCTION FEATURES OF THE MOTOR

Dry, asynchronous and waterproof motor, cooled by the surrounding liquid.
Continuous S1 duty with completely submerged pump.
Rotor mounted on permanently lubricated ball bearings, oversized to ensure long-term reliability and extended lifetime.
In the single-phase version, the pump is supplied with capacitor housed in an appropriate box with circuit breaker that enables start-up. The automatic version is also supplied with a float.
Single-phase version supplied with float and control panel with overload protection and start-up capacitors.
Number of poles: 2
Max starts/hour: 15

MATERIALS

N.	PARTS*	MATERIALS
1	POWER INPUT CABLE	H07RN-F
2	UPPER COVER	EN GJL 200 CAST IRON
3	MOTOR BODY	EN GJL 200 cast iron
4	MOTOR SHAFT	AISI 420
5	OR	NBR
6	BEARING FLANGE	EN GJL 200 cast iron
7	MECHANICAL SEAL	Motor: Carbon graphite - Alumina Pump: Carbon graphite - Alumina
8	RADIAL SEAL	NBR
9	IMPELLER	EN GJL 200 CAST IRON
10	HYDRAULIC BODY	EN GJL 200 CAST IRON
11	GRINDER	HARD AISI 440C STEEL

* In contact with the liquid

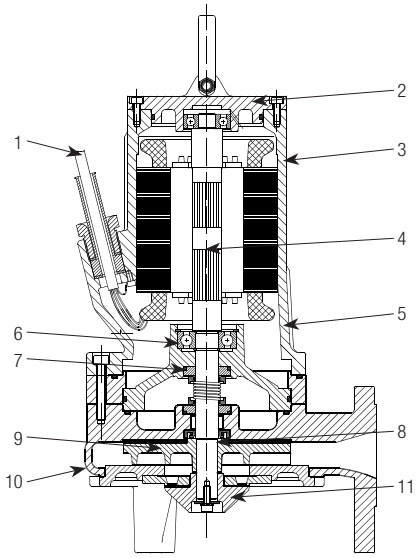

PERFORMANCE RANGE

The performance curves are based on kinematic viscosity values = 1 mm²/s and density equal to 1000 kg/m³. Curve tolerance according to ISO 9906.

GRAPHIC SELECTION TABLE

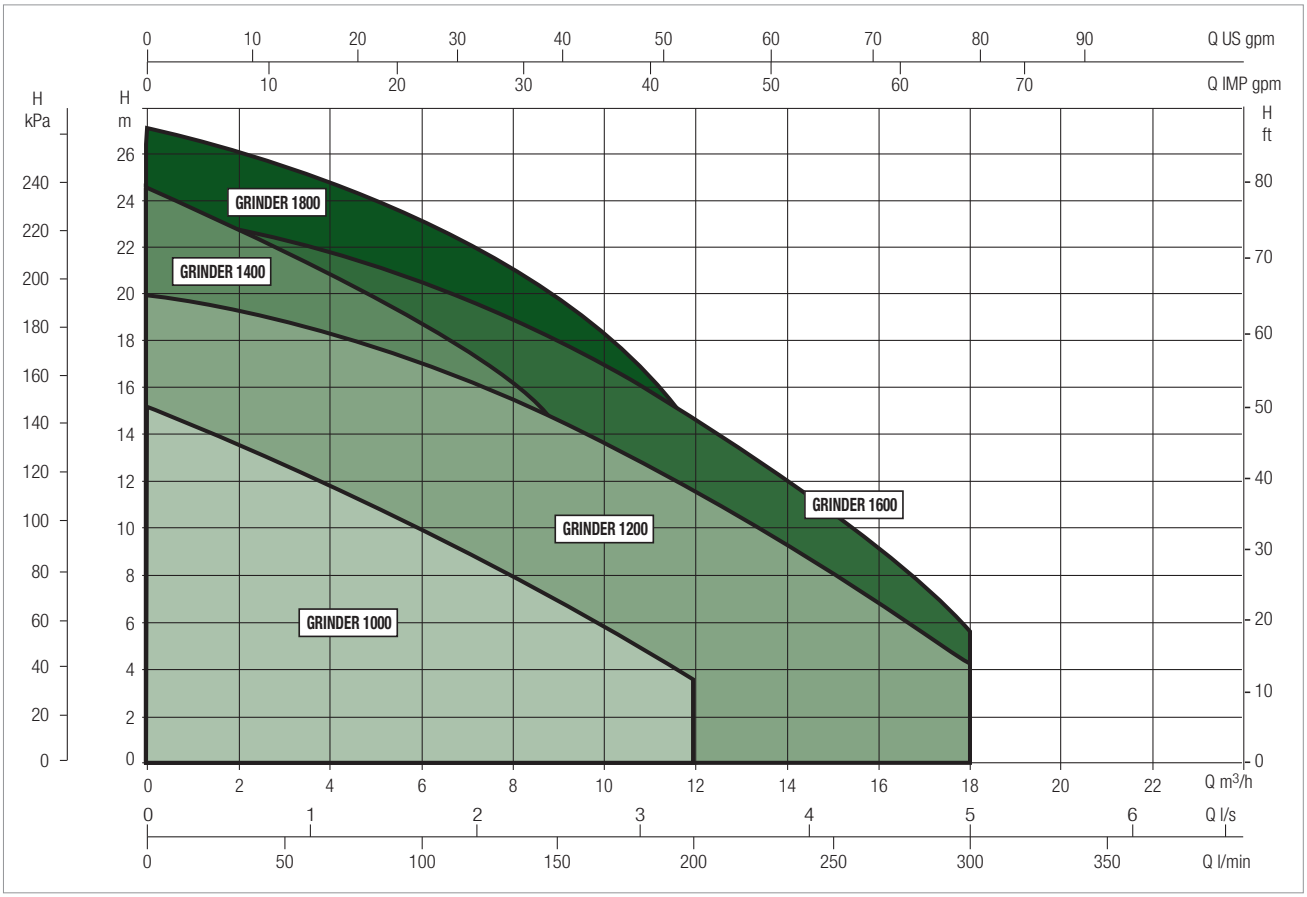

SELECTION TABLE - GRINDER 1000-1200-1600

MODEL	Q= m³/h	0	3	6	9	12	15	18
	Q=l/min	0	50	100	150	200	250	300
GRINDER 1000 M-T	H (m)	15.2	12.9	10	6.9	3.6		
GRINDER 1200 M-T		20	18.9	17	14.7	11.7	8.1	4.2
GRINDER 1600 M-T		23.5	22.3	20.6	18	14.8	11	5.7

DAB PUMPS reserves the right to make modifications without notice.

GRINDER 1000-1200-1600 - SUBMERSIBLE PUMPS FOR LIFTING WASTE WATER FOR GRINDING

Liquid temperature range: from 0 °C to +35 °C

Fig. A

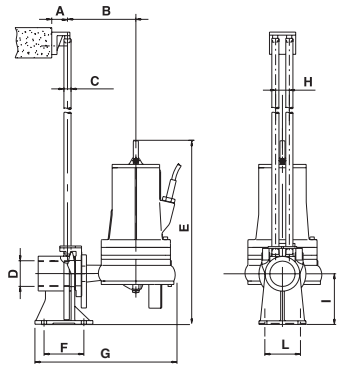

Fig. B

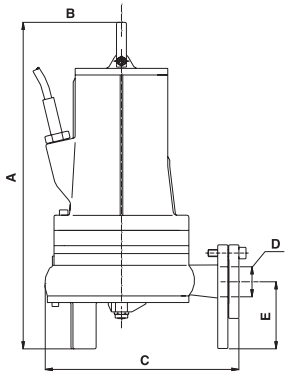

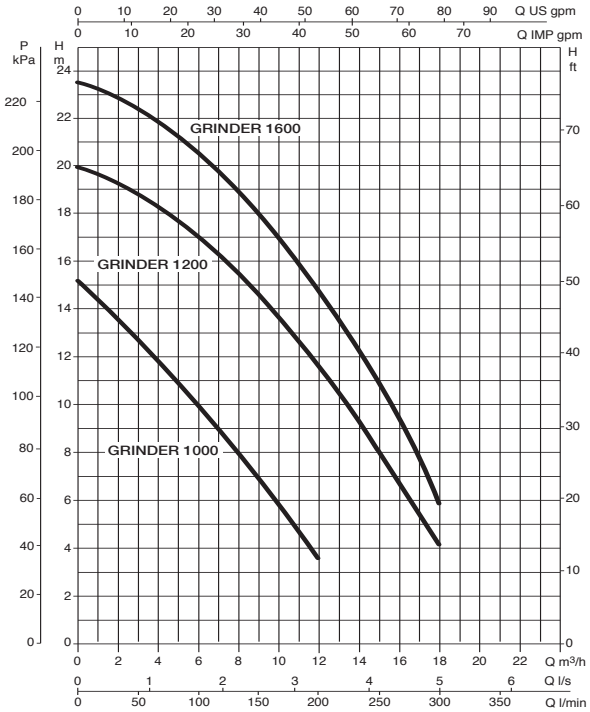

The performance curves are based on kinematic viscosity values = 1 mm²/s and density equal to 1000 kg/m³. Curve tolerance according to ISO 9906.

MODEL	ELECTRICAL DATA						
	POWER INPUT 50 Hz	P1 MAX kW	P2 NOMINAL		In A	CAPACITOR	
			kW	HP		µF	Vc
GRINDER 1000 M-A	1 x 220 - 240 V ~	1.5	1	1.3	8	30+40	450
GRINDER 1000 M-NA	1 x 220 - 240 V ~	1.5	1	1.3	8	30+40	450
GRINDER 1000 T	3 x 400 V ~	1.6	1	1.3	2.8	-	-
GRINDER 1200 M-A	1 x 220 - 240 V ~	2.8	1.5	2	12.7	35+40	450
GRINDER 1200 M-NA	1 x 220 - 240 V ~	2.8	1.5	2	12.7	35+40	450
GRINDER 1200 T	3 x 400 V ~	2.7	1.5	2	4.7	-	-
GRINDER 1600 M-A	1 x 220 - 240 V ~	3.8	1.8	2.4	16.8	35+40	450
GRINDER 1600 M-NA	1 x 220 - 240 V ~	3.8	1.8	2.4	16.8	35+40	450
GRINDER 1600 T	3 x 400 V ~	3.3	1.8	2.4	5.8	-	-

MODEL (FIG. A)	A	B	C Ø	D	E	F	G	H	I	L
GRINDER 1000	50	160	¾"	2"G	540	85	410	38	130	94
GRINDER 1200	50	160	¾"	2"G	540	85	410	38	130	94
GRINDER 1600	50	160	¾"	2"G	540	85	410	38	130	94

MODEL (FIG. B)	A	B	C	E	DNM GAS	PACKING DIMENSIONS			VOLUME (m³)	WEIGHT kg
						L/A	L/B	H		
GRINDER 1000	445	145	270	110	2"	680	330	446	0.1	38
GRINDER 1200	445	145	270	110	2"	680	330	446	0.1	39
GRINDER 1600	445	145	270	110	2"	680	330	446	0.1	40

DAB PUMPS reserves the right to make modifications without notice.

GRINDER 1400-1800

SUBMERSIBLE PUMPS

TECHNICAL DATA

Operating range: from 2 to 9 m^3/h with head up to 24,5 m for the single-phase version, and 26,5 m for the three-phase version.
Pumped liquid: grey waste water, rough loaded water containing solid matter and/or long fibre, non aggressive.
Liquid temperature range: from 0 °C to +55 °C
Maximum ambient temperature for operation with motor above water: +40 °C
Max. immersion depth: 7 metres.
Protection class: IP68
Insulation class: F
Standard voltage: 220-240 V - 50Hz single-phase.
380-415 V - 50Hz three-phase.
Power cable: H07RN-F, 10 metres.
Installation: fixed or portable, vertical position.

APPLICATIONS

Cast-iron centrifugal submersible pump with grinder, suitable for lifting and decanting dirty waste civil and industrial water. Thanks to the grinding system, the matter found in the sewage (organic waste, textiles, rubber, etc.), is ground, enabling the lifting of the liquid without the risk of clogging or obstruction in the delivery piping.

CONSTRUCTION FEATURES OF THE PUMP

Cast-iron pump body, motor casing and suction cover. High resistance cast-iron ring impeller. Microcast tempered steel grinder to ensure strength and durability. Stainless steel rotor shaft, handle, and bolts and screws. Inspectable oil seal chamber. Silicon carbide mechanical seal. GAS threaded 2" radial delivery port, to facilitate the installation of lifting devices (DSD 2).

CONSTRUCTION FEATURES OF THE MOTOR

Continuous duty, dry asynchronous submersible motor in watertight casing. Rotor running on ball bearings, oversized and permanently lubricated. Thermal protection in the winding, to be connected to the control panel.
In order to operate, the pumps must be equipped with control and protection systems, supplied separately
and not connected to the electric pumps. The single-phase version must be equipped with an ED HS control panel.
Supplied with 10 metre neoprene rubber power input cable 6x(4x1,5)+(2x0,5).
Number of poles: 2
Max starts/hour: 20

MATERIALS

N.	PARTS*	MATERIALS
1	PUMP BODY	CAST IRON 200 UNI ISO 185
4	IMPELLER	CAST IRON 200 UNI ISO 185
7	MOTOR SHAFT	AISI 416 STAINLESS STEEL X12CrS13 - UNI 6900/71
10	MOTOR CASING	CAST IRON 200 UNI ISO 185
16	MECHANICAL SEAL	SILICON CARBIDE
28	OR RING	VITON
29	OR RING	VITON
35	SUCTION COVER	CAST IRON 200 UNI ISO 185
77	PROTECTION COVER	CAST IRON 200 UNI ISO 185
120	HANDLE	AISI 304 STAINLESS STEEL X5CrNi 1810- UNI 6900/71
147	FIXED GRINDER SECTION	AISI 440 TEMPERED STAINLESS STEEL
148	FIXED GRINDER SECTION	AISI 440 TEMPERED STAINLESS STEEL

* In contact with the liquid

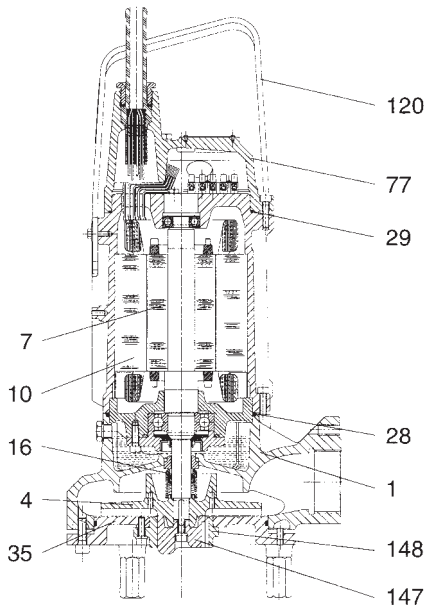

DAB PUMPS reserves the right to make modifications without notice.

GRINDER RANGE

SUBMERSIBLE PUMPS

PERFORMANCE RANGE

The performance curves are based on kinematic viscosity values = 1 mm²/s and density equal to 1000 kg/m³. Curve tolerance according to ISO 9906.

GRAPHIC SELECTION TABLE

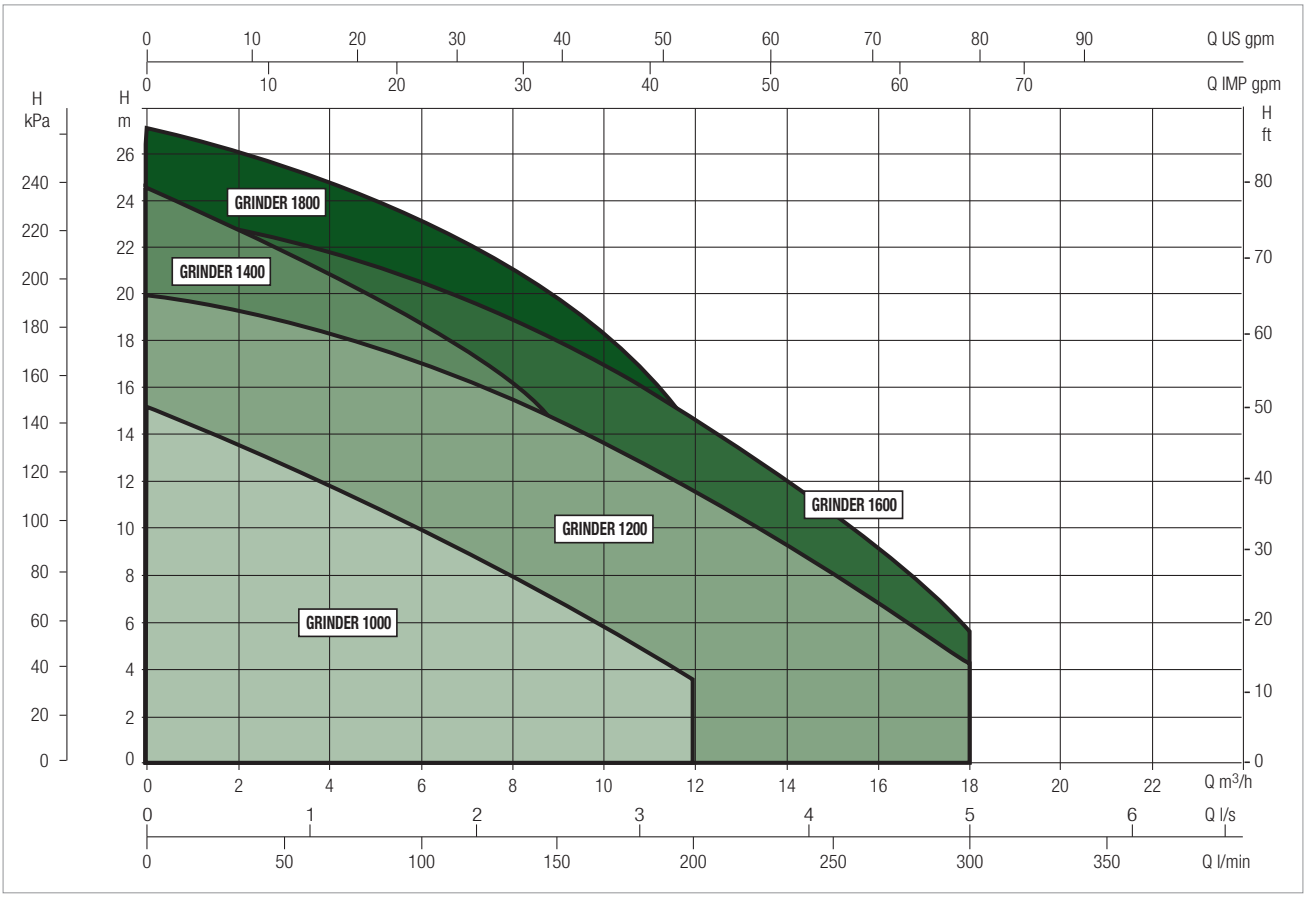

SELECTION TABLE - GRINDER 1400-1800

MODEL	Q= m³/h	0	3	6	9	12	15	18
	Q=l/min	0	50	100	150	200	250	300
GRINDER 1400 M	H (m)	24.5	22.3	19	14.1			
GRINDER 1800 M		27,2	25,5	23	19,9	14		

GRINDER 1400 - 1800 - SUBMERSIBLE PUMPS FOR LIFTING WASTE WATER FOR GRINDING

Liquid temperature range: from 0 °C to +55 °C

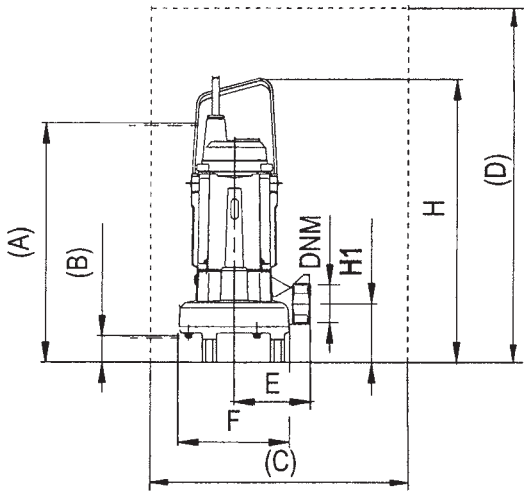

(A) minimum level for continuous operation
(B) minimum residual level in manual operation
(C) minimum well base size
(D) minimum well height size

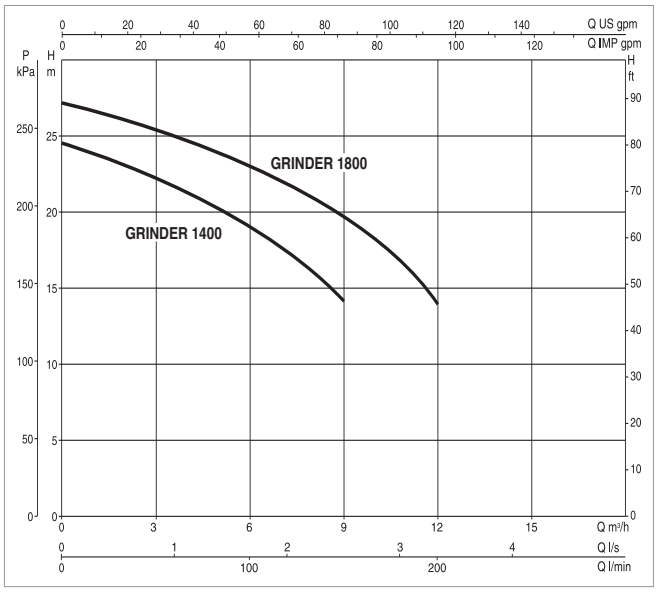

The performance curves are based on kinematic viscosity values = 1 mm²/s and density equal to 1000 kg/m³. Curve tolerance according to ISO 9906.

MODEL	ELECTRICAL DATA						
	POWER INPUT 50 Hz	P1 MAX kW	P2 NOMINAL		In A	CAPACITOR	
			kW	HP		µF	Vc
GRINDER 1400 M	1 x 220 V -240 V ~	1.95	1.1	1.5	8.7	40	450
GRINDER 1800 T	3 x 400 V ~	2	1.5	2	3.8	-	-

MODEL	A	B	C	D	E	F Ø	DNM	H	H1	PACKING DIMENSIONS			VOLUME (m³)	WEIGHT kg
										L/A	L/B	H		
GRINDER 1400 M	500	50	500 X 500 min	600 min	150	219	2" G	549	109	680	330	446	0.1	43.2
GRINDER 1800 T	500	50	500 X 500 min	600 min	150	219	2" G	549	109	680	330	446	0.1	43.8

DAB PUMPS reserves the right to make modifications without notice.